655 Eisenhower Drive
Owatonna, MN 55060 USA
Phone: (507) 455-7000
Tech. Serv.: (800) 533-6127
Fax: (800) 955-8329
Order Entry: (800) 533-6127
Fax: (800) 283-8665
International Sales: (507) 455-7223
Fax: (507) 455-7063
Website: www.otctools.com

Form No. 106342

Parts List & Operating Instructions for: **314729**

Allison Transmission Adapter

Application: Allison 500 and 600 Series Transmissions

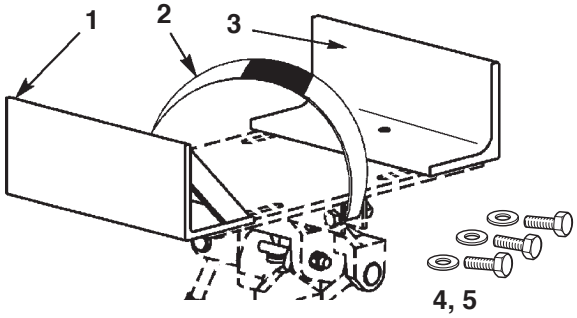

Item No.	Part No.	Qty.	Description
1	**314733**	1	Front Support Bracket
2	**306422**	1	Strap Assembly
3	**314730**	1	Back Support Bracket
4	**12004**	3	Washer *(for 1/2" bolt)*
5	**10079**	3	Hex Hd. Cap Screw

Assembly Instructions

(Item numbers refer to the parts list.)

1. Use fasteners (Item Nos. 4 & 5) to loosely assemble the transmission support brackets (Nos. 1 & 2) to the mounting plate.
2. Adjust the brackets to fit the transmission pan when the load is centered on the jack.
3. Tighten the fasteners assembled in Step 1.
4. Secure the strap assembly (No. 2) around the component. Attach the hooks on the end of the strap to the angled slots provided on the support bracket (No. 1), or other suitable location on the platform.

Safety Precautions

Caution: To help prevent personal injury and damage to equipment,

- **Read, understand, and follow all safety precautions and operating instructions.**
- **Wear eye protection that meets the requirements of ANSI Z87.1 and OSHA.**
- **Do not modify the transmission adapters unless approved or supplied by OTC.**
- **Do not exceed the maximum capacity of the jack used with the adapters.**

This guide cannot cover every situation, so always do the job with safety first.



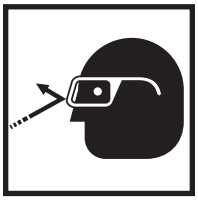

Issue Date: Rev. B, August 8, 2014

© Bosch Automotive Service Solutions LLC